MiBOXER® | Mi·Light Subordinate New Brand

40W RGB+CCT Panel Light

Model No.: FUTL01 / FUTL02

Features

40W RGB+CCT Panel Light is made of Aluminum Alloy+LGP+diffuser plate. It's with full-sealed design with anti-moisture and anti-mosquito. Beam angle is 160 degree; The light is smooth without flickering,flare and dark space. Widely used on hotel, restaurant, exhibition center and office, etc.

- 16 Millions of colors to choose
- Beam Angle 160°
- Smartphone APP control (2.4GHz gateway is needed)
- Color temperature 2700K~6500K
- 2.4G RF wireless transmission technology
- Support third party voice control (2.4GHz gateway is needed)
- Dim brightness/ Saturation
- Remote control Control distance 30m

Parameters

Model No.: FUTL01 / FUTL02
Input Voltage: AC180~240V 50/60Hz
Power: 40W
Working Temperature: -20~60°C
Color Temperature: 2700K~6500K
Luminous Flux: 2800LM
Light Efficiency: 70LM/W

UGR: <19
CRI: >80
PF: >0.9
Lifespan: 50000h
Beam Angle: 160°
RF: 2.4GHz
Remote Control Distance: 30M

Product Size:

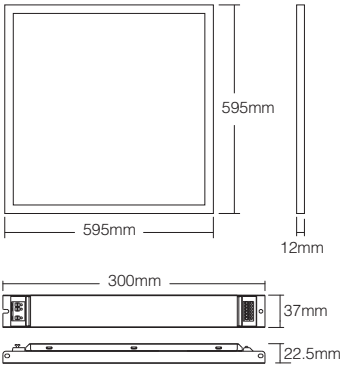

Model No.: FUTL01
Product Weight: 3.05kg

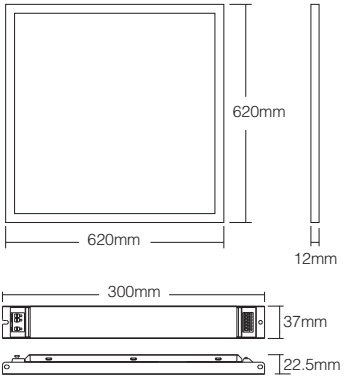

Model No.: FUTL02
Product Weight: 3.37kg

Connection Diagram

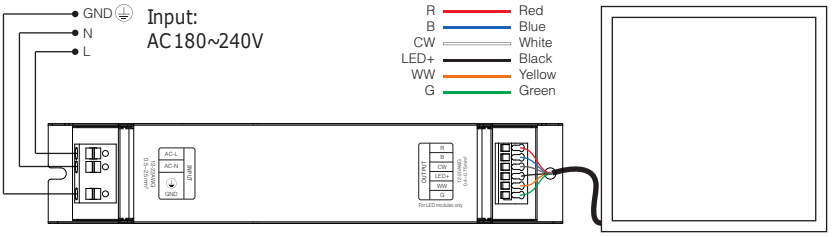

Link/Unlink

Compatible with these remote controls (Purchased separately)

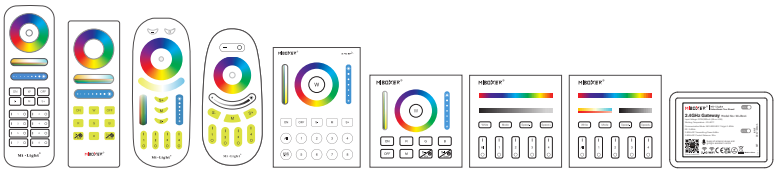

FUT089 FUT088 FUT092 FUT096 B8 B0 B3 / T3 B4 / T4 WL-Box1

Lighting can be working after linking with remote; for more details, pls read the remote instruction.

Dynamic Mode Sheet

Number	Dynamic Mode	Brightness	Speed	Saturation
1	Colors gradual change	Adjustable	Adjustable	Adjustable
2	White light Gradual change			Unadjustable
3	RGB gradual change			Adjustable
4	Seven colors jump to change			
5	Jump to change randomly			
6	Red light gradual change +Flash 3 times			
7	Green light gradual change +Flash 3 times			
8	Blue light gradual change +Flash 3 times			
9	White light gradual change +Flash 3 times			Unadjustable

Auto-transmitting Diagram

One panel light can transmit the signals from the remote control to another panel light within 30m, as long as there is a panel light within 30m, the remote control distance can be limitless.

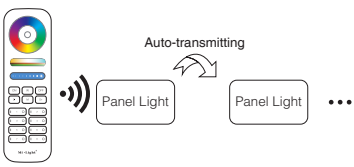

Auto-synchronization function

Different panel light can work synchronously when they are started at different times, controlled by the same remote, under same dynamic mode and with same speed, and within 30m distance.

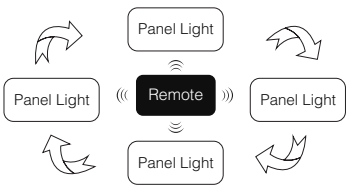

Attention

1. Please read the instructions carefully, and make sure the environment is suitable for the installation.
2. The products is only for indoor using.
3. Please don't install the lighting fixtures on the areas with hot steam and corrosive gas.
4. Please do not use the lighting fixtures in the place with widely range metal area or strong electromagnetic wave nearby, otherwise, the remote distance will be seriously affected.
5. Non-specialized person do not dismantle the lighting fixtures, otherwise it will damage the lighting fixtures.

Maintenance Considerations

1. Please switch off the power before cleaning the lighting fixtures
2. Please clean the lighting fixtures with dry duster cloth; do not use chemical and corrosive materials to clean the lighting fixturesp.

Made in China