MiBOXER®

Mi·Light Subordinate New Brand

20W RGB+CCT Panel Light

Model No.: FUTL03

Features

20W RGB+CCT Panel Light is made of Aluminum Alloy+LGP+diffuser plate. It's with full-sealed design with anti-moisture and anti-mosquito. Beam angle is 160degree; The light is smooth without flickering,flare and dark space. Widely used on hotel,restaurant,exhibition center and office,etc.

16 Millions
of colors to choose

Dimmable
Saturation control

Color temperature
2700K~6500K

Beam Angle 160°

2.4G RF Remote control
Control distance 30m

Smart phone App control
WiFi Box or 2.4GHz Gateway is needed

Support amazon alexa and google assistant control
2.4GHz Gateway is needed

Parameters

Model No.: FUTL03
Input: AC100~240V 50/60Hz
Power Rating: 20W
Working Temperature: -20~60℃
Color temperature: 2700~6500K
Luminous Flux: 1400LM
Light Efficiency: 70LM/W
CRI: >80
UGR: <19
Lifespan: 50000h
Beam Angle: 160°
Remote Control Distance: 30m
Product Weight: 840g

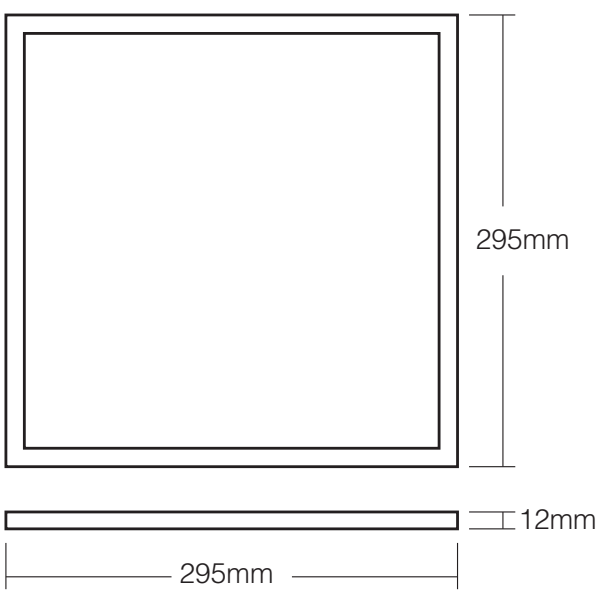

Dynamic Mode Sheet

Number	Dynamic Mode	Brightness	Speed	Saturation
1	Colors gradual change	Adjustable	Adjustable	Adjustable
2	White light gradual change			Unadjustable
3	RGB gradual change			Adjustable
4	Seven colors jump to change			
5	Jump to change randomly			
6	Red light gradual change +Flash 3 times			
7	Green light gradual change +Flash 3 times			
8	Blue light gradual change +Flash 3 times			
9	White light gradual change +Flash 3 times			Unadjustable

Auto-transmitting Diagram

One strip light driver can transmit the signals from the remote control to another strip light driver within 30m, as long as there is a strip light driver within 30m, the remote control distance can be limitless.

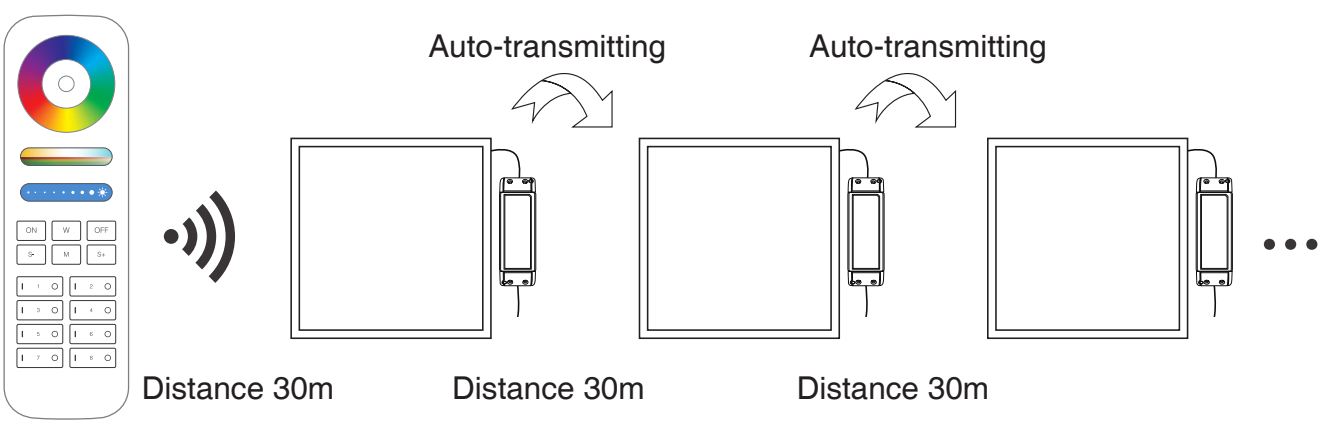

Auto-synchronization function

Different strip light drivert can work synchronously when they are started at different times, controlled by the same remote, under same dynamic mode and with same speed, and within 30m distance.

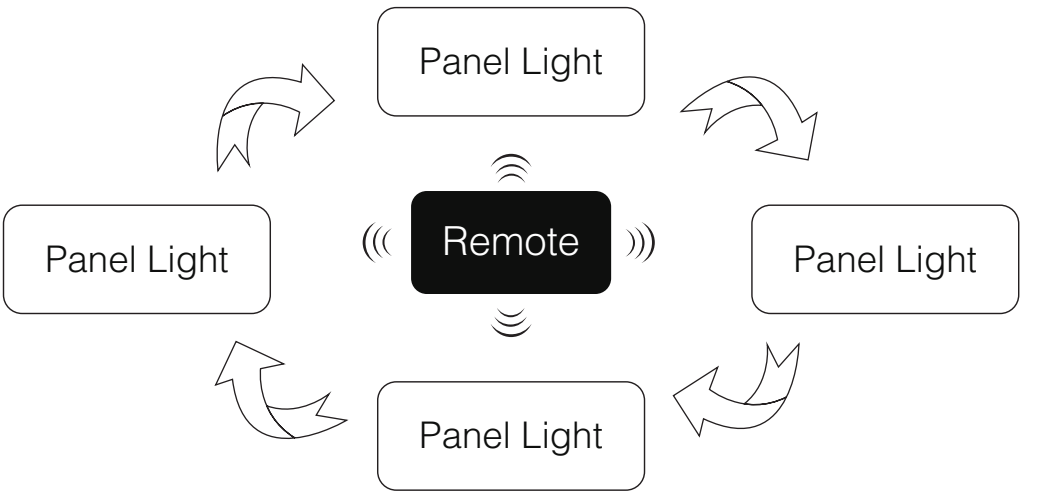

Connection Diagram

Input: AC 100~240V

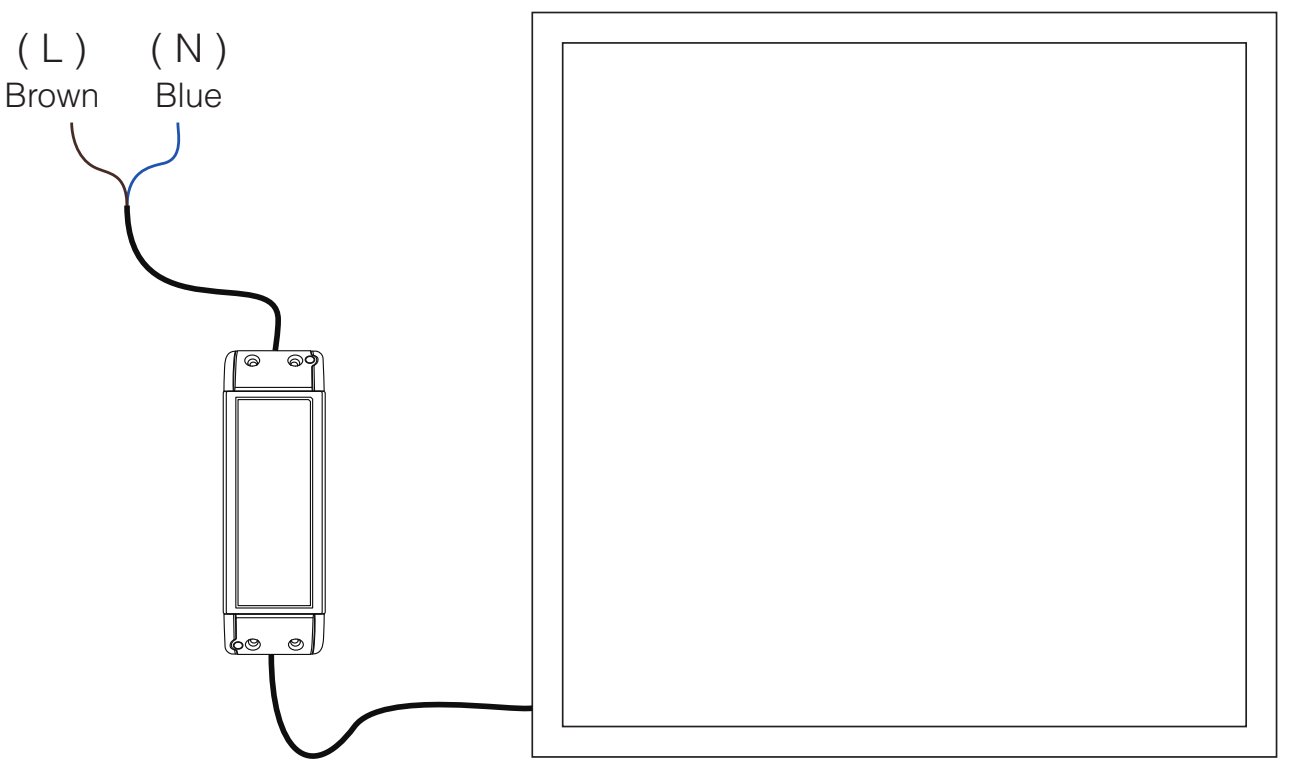

Link/Unlink

Compatible with these remote controls (Purchased separately)

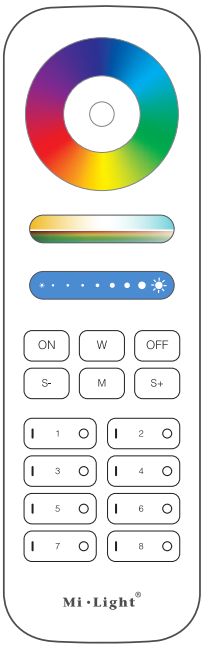

FUT089

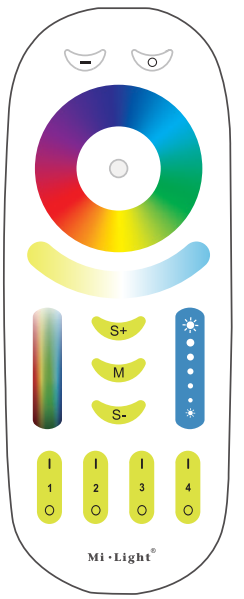

FUT092

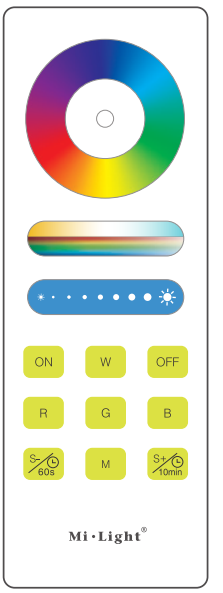

FUT088

FUT095

FUT096

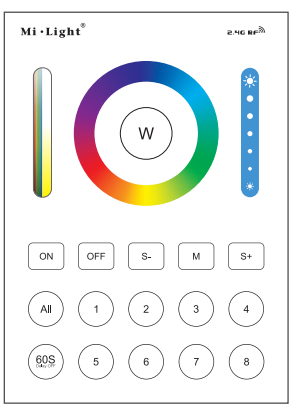

B8

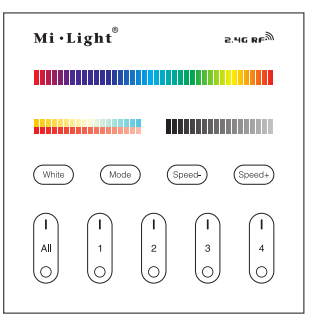

B4 / T4

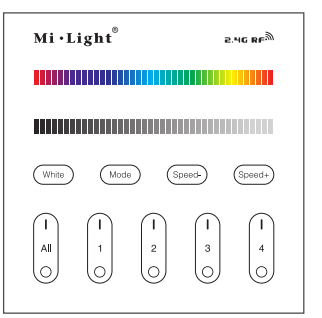

B3 / T3

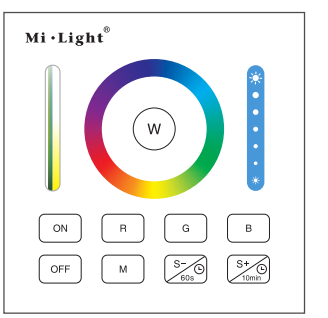

B0

NOTE:

Lighting can be working after linking with remote; for more details, pls read the remote instruction.

Attention

1. Please read the instructions carefully, and make sure the environment is suitable for the installation.
2. The products is only for indoor using.
3. Please don't install the panel light on the areas with hot steam and corrosive gas.
4. Non-specialized person do not dismantle the panel light, otherwise it will damage the panel light.
5. Please do not use panel light around the mental area and high magnetic field, otherwise, it will badly affect the control distance.

Maintenance Considerations

1. Please switch off the power before cleaning the panel light.
2. Please clean the panel light with dry duster cloth; do not use chemical and corrosive materials to clean the panel light.

Made in China