MiBOXER®

Mi·Light
Subordinate New Brand

GU10 RGB+CCT LED Spotlight

Model No.: FUT103

0201-7

1. Features

RGB+CCT
16 Millions of colors to choose

Color temperature
2700K~6500K

Dim brightness/
Saturation

2.4G RF wireless transmission
technology

Signal transmitting &
Modes synchronization

Remote control
Control distance 30m

Smartphone APP control
(2.4GHz gateway is needed)

Support third party voice control
(2.4GHz gateway is needed)

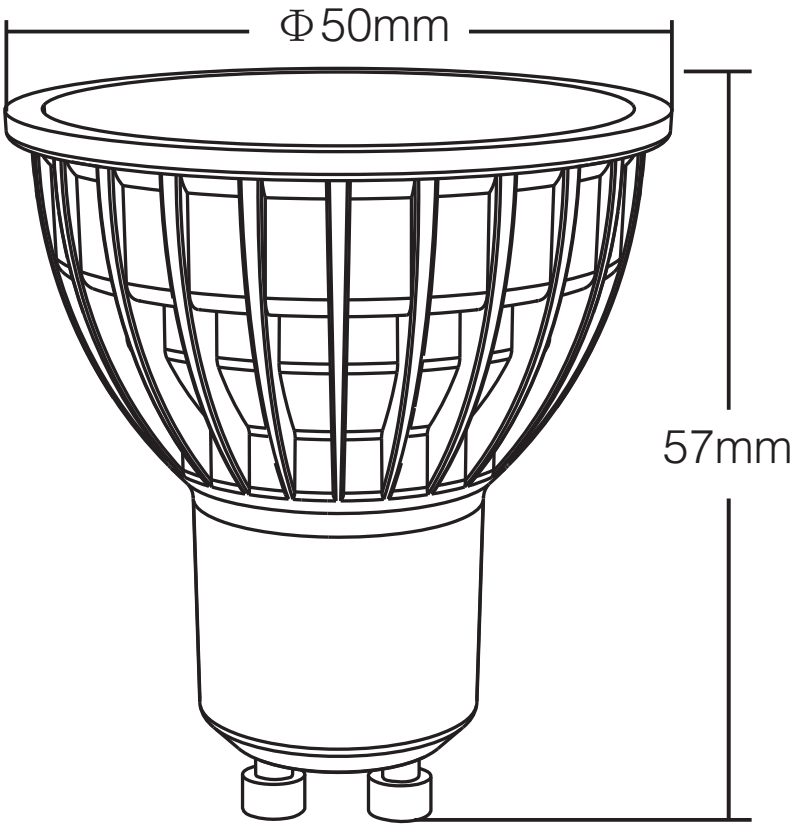

GU10 RGB+CCT LED Spotlight

Model No.: FUT103
Power: 4W
Voltage: 100-240V~ 50/60Hz
Rated Current: 0.07A
Working Temp.:-10~40°C
Color Temp.: 2700K~6500K
Luminous Flux: 250LM-280LM
Luminous Efficiency: 70LM/W
CRI: >80 PF: 0.55
Lifespan: 50000h
Beam Angle: 25°
RF: 2.4GHz
Control Distance: 30m
Product Weight: 42g

2. Instructions

Step 1

Put the light bulb in the suitable lighting fixture.

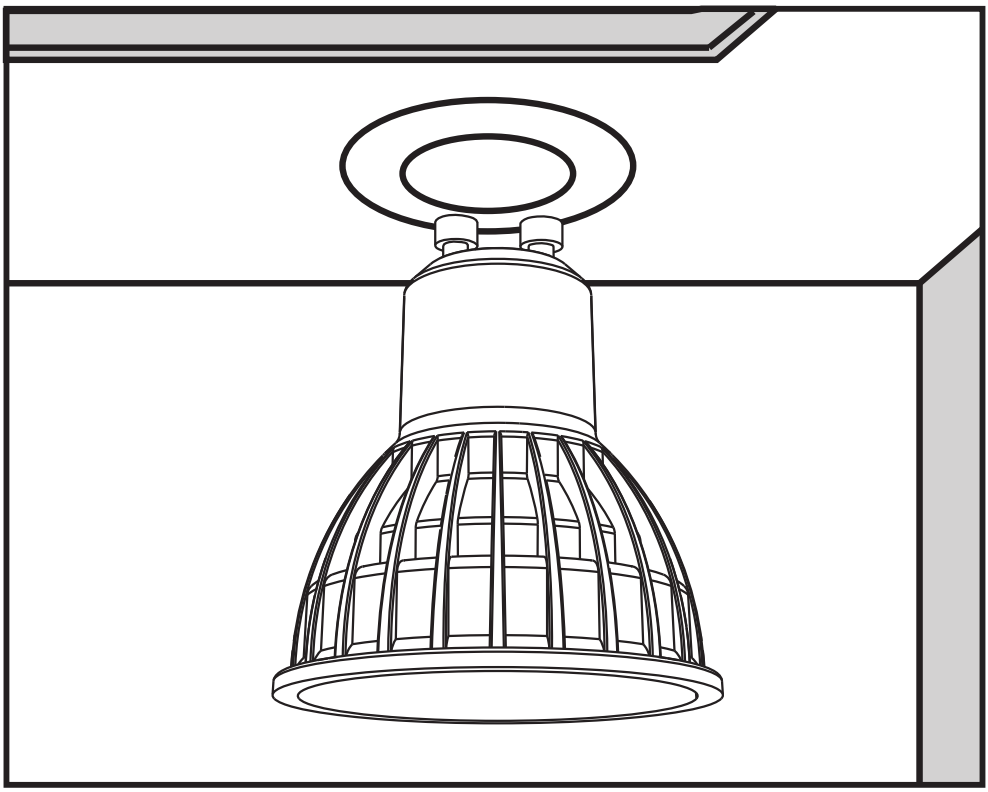

⚠ NOTE:

For lamps with a weight significantly higher than that of the lamps for which they are a replacement, attention should be drawn to the fact that the increased weight may reduce the mechanical stability of certain luminaires and lampholders and may impair contact making and lamp retention.

Step 2: Link/Unlink

Compatible with these remote controls (Purchase separately)

FUT089

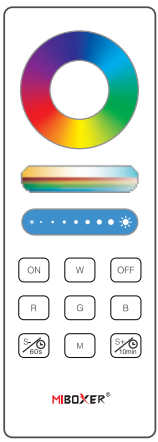

FUT088

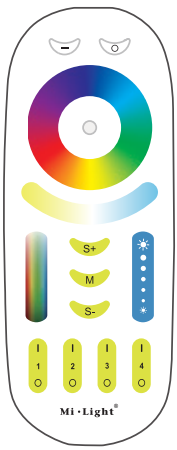

FUT092

FUT096

B8

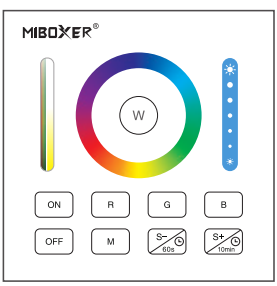

B0

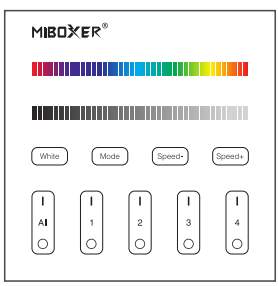

B3 / T3

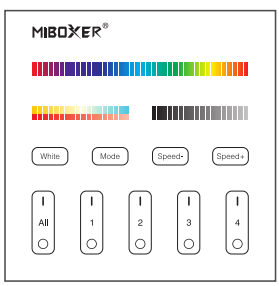

B4 / T4

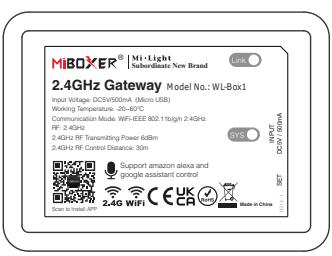

WL-Box1

⚠ NOTE:

Light will work after linking with remote control; for more details, pls read the remote instruction.

3. Dynamic Mode Sheet

Number	Dynamic Mode	Brightness / Saturation / Speed
1	Mardi Gras	Adjustable
2	Automatic color change	
3	Sam	
4	Gemstone	
5	Twilight	
6	American	
7	Fat Tuesday	
8	Party	
9	Slow Color Splash	

4. Signal transmitting

One lighting fixture can transmit the signals from the remote control to another lighting fixture within 30m, as long as there is a lighting fixture within 30m, the remote control distance can be limitless.

5. Modes synchronization

Different lighting fixture can work synchronously when they are started at different times, controlled by the same remote, under same dynamic mode and within 30m distance.

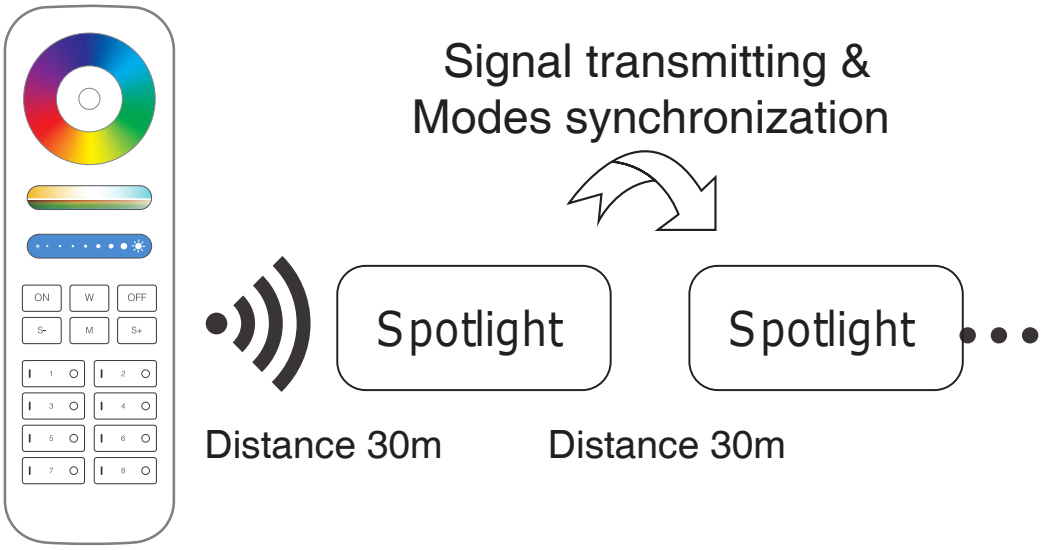

6. Attention

1. When install the lighting fixtures, pls switch off the power to make sure the safty.
2. Please check whether the input voltage supply is in accordance with the lighting fixtures.
3. Non-professional user cannot dismantle the lighting fixtures directly, otherwise, it may cause fire and electric shock.
4. Please do not use lighting fixtures around the mental area and high magnetic field, otherwise, it will badly affect the control distance.

Controller can not
use in humid area

Can not connect with dimmable electric
circuit, please use remote to dimi lighting

TÜV

Made in China